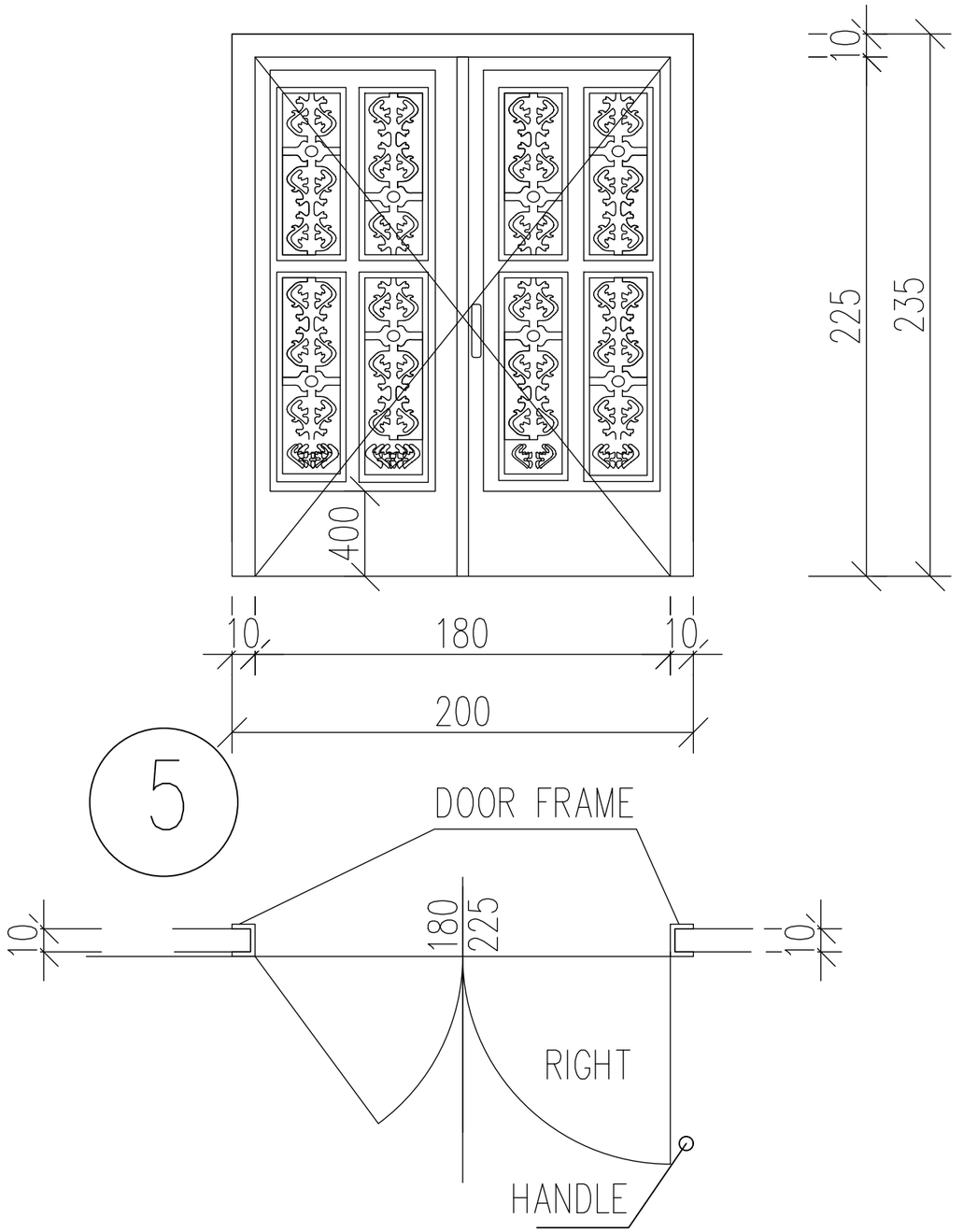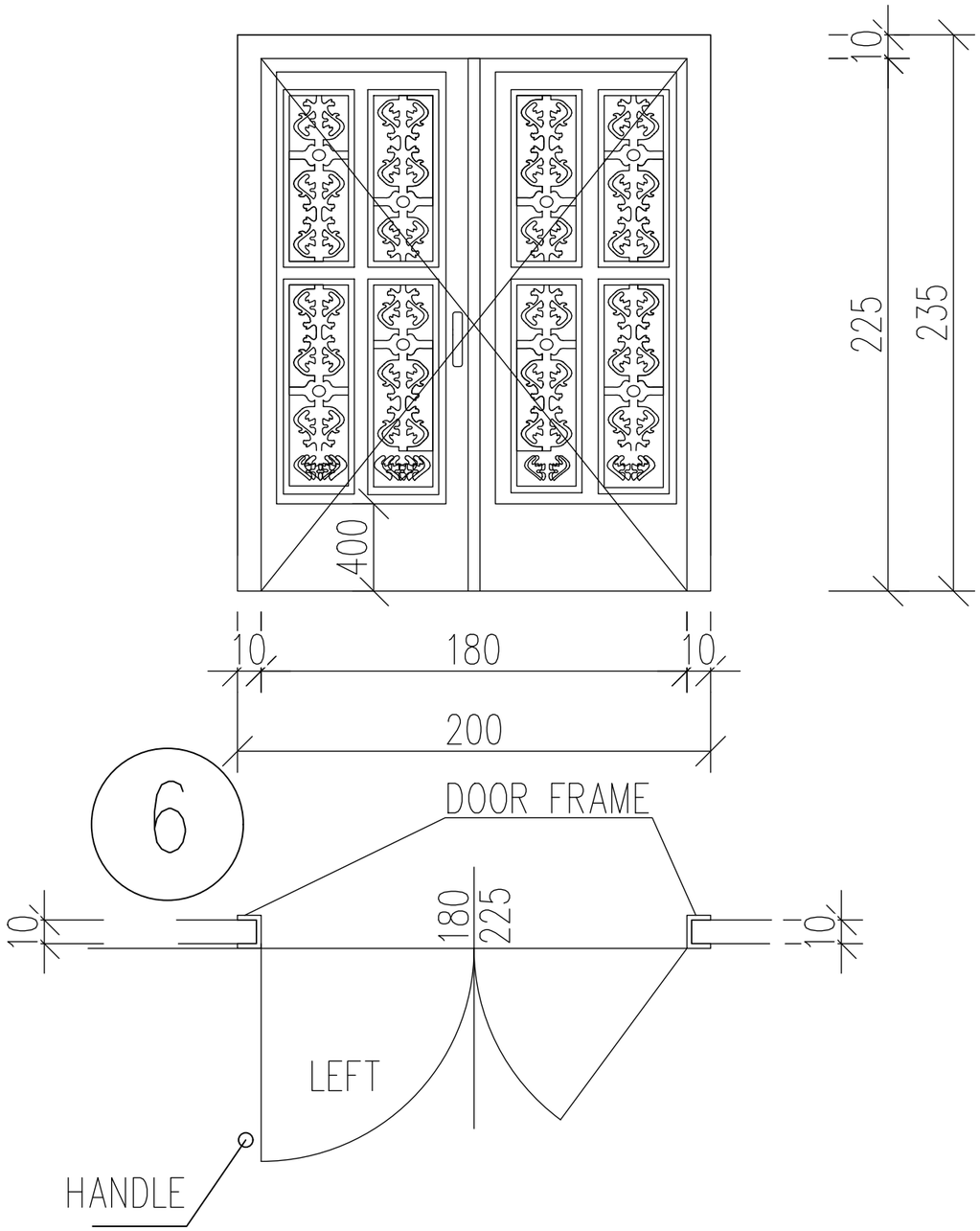5,6 – BEHIND GANESHA
2 PCS DIMENSION IN CM
WOOD CARVING ONE SIDE